Bilge Blower Wiring Diagram

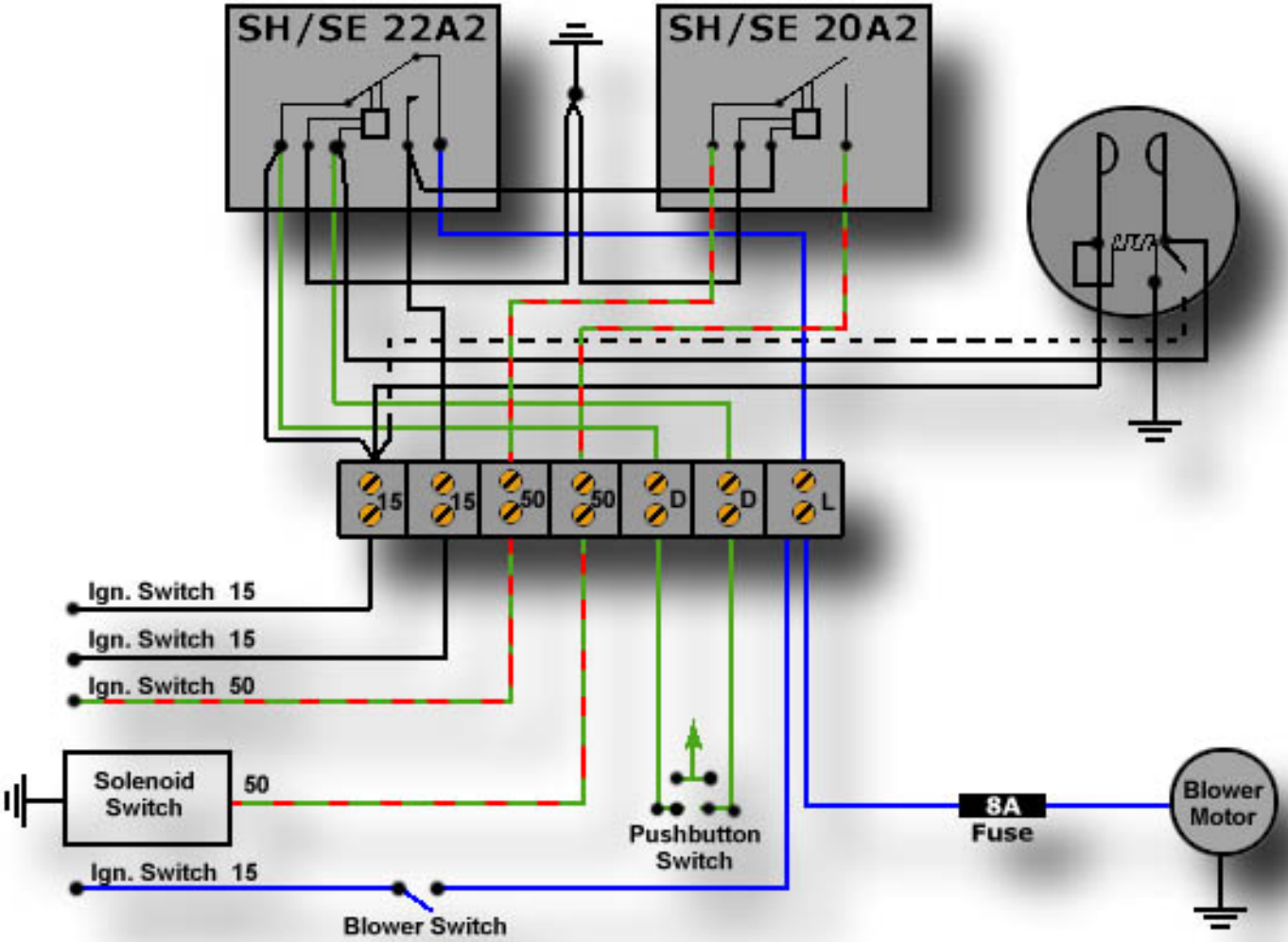

Water Temp. Gage
#52

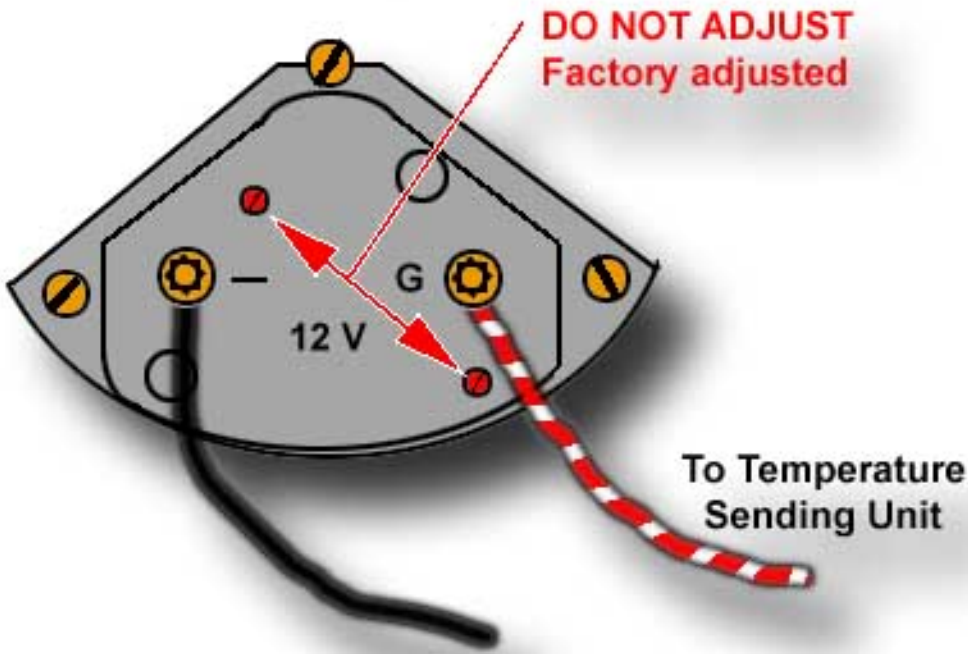

Water Drive Light
#35

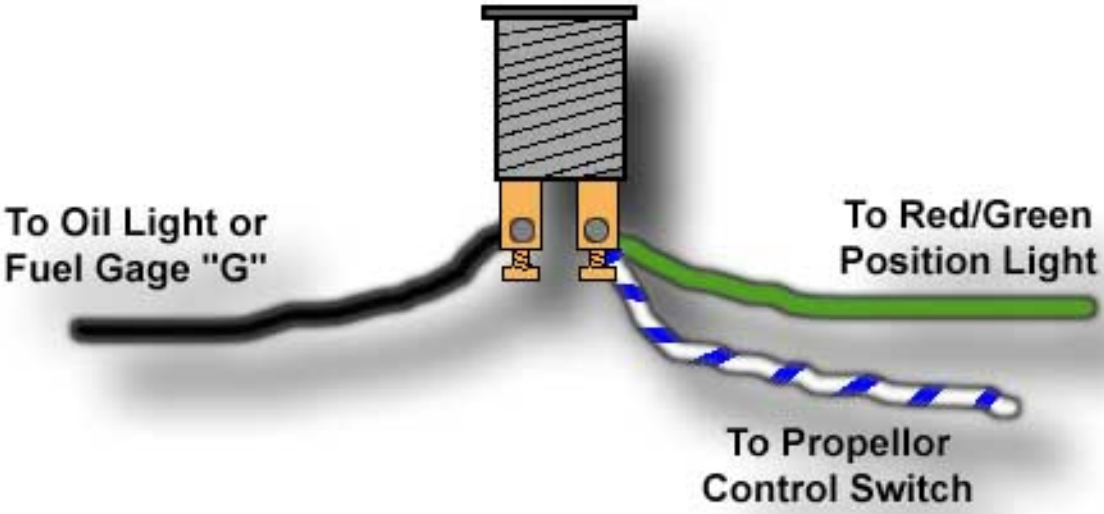

Water Drive Control Switch
#24

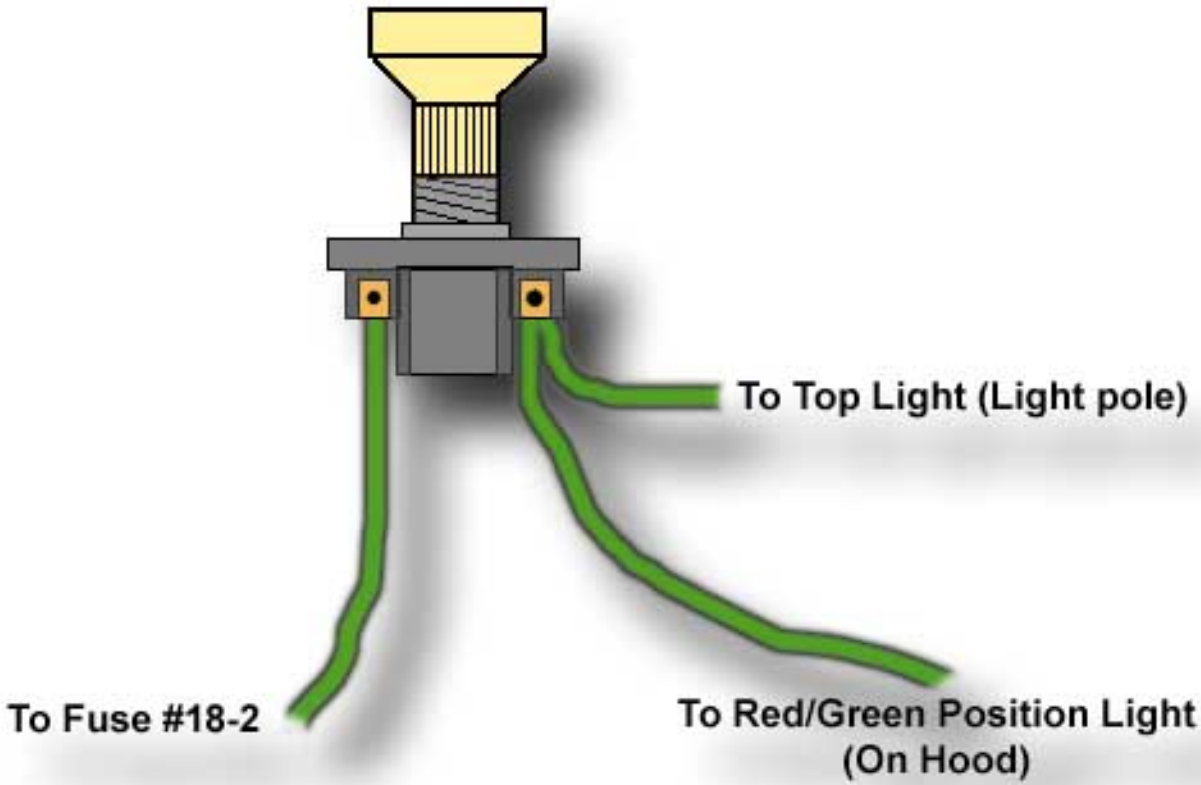

Reverse Lamps
(#7 & #8)

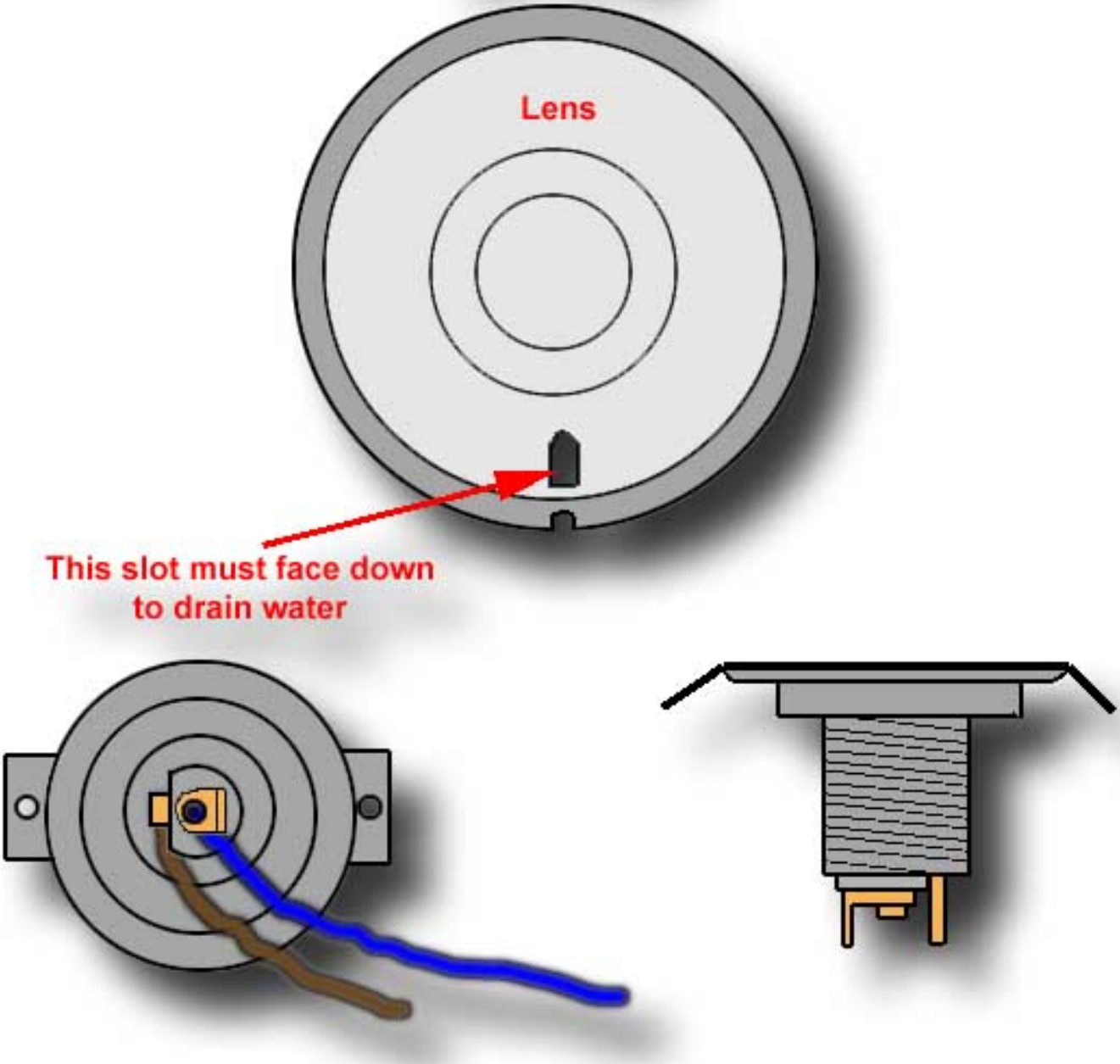

Rear Rail Connector
(#53)

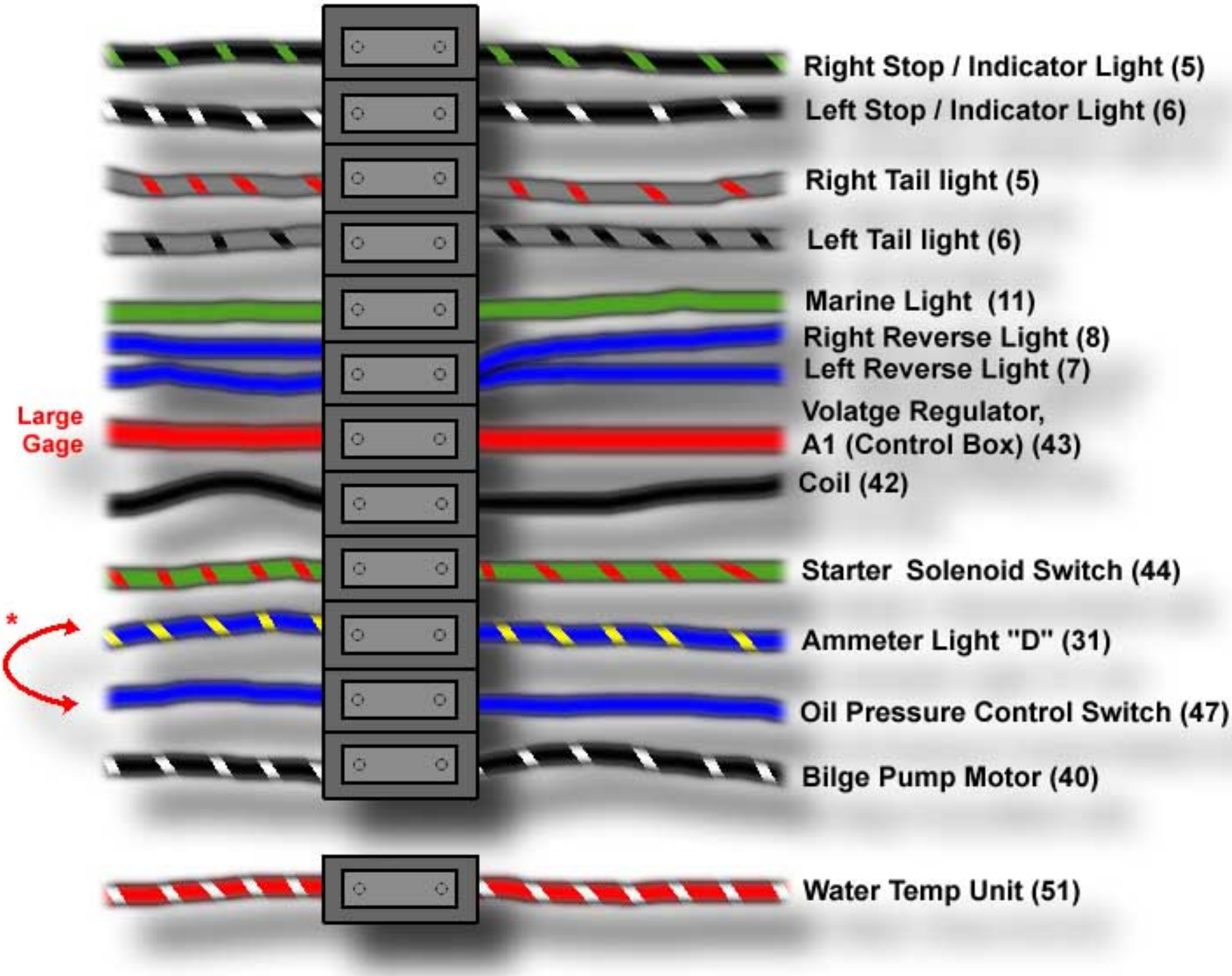

* Sometimes reversed

Rail Connector
(Under Hood)

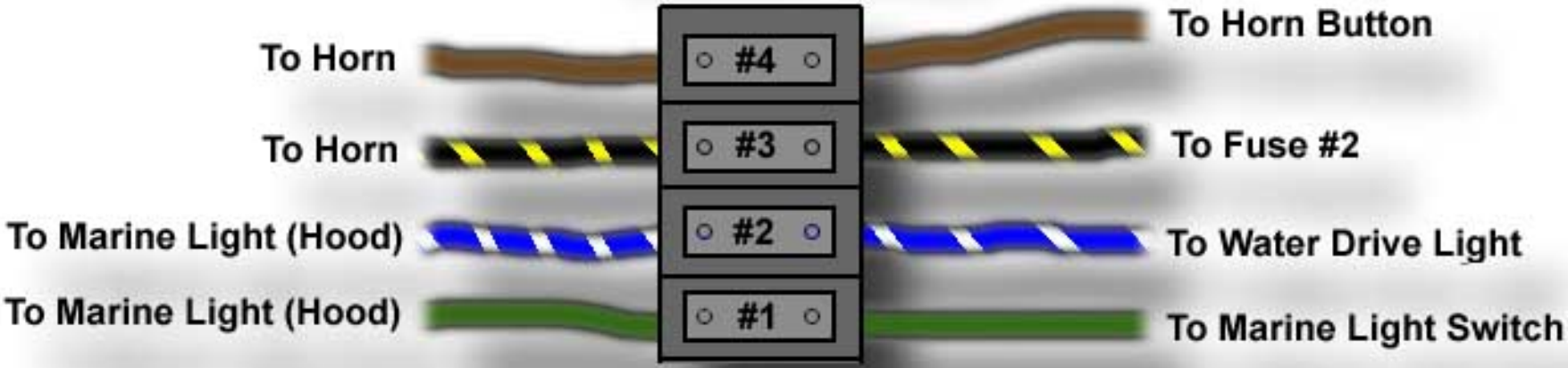

Marine Top Light Socket (Light Pole)

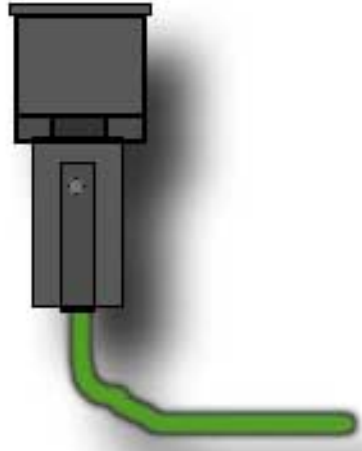

Ignition Switch #25
(Late Model)

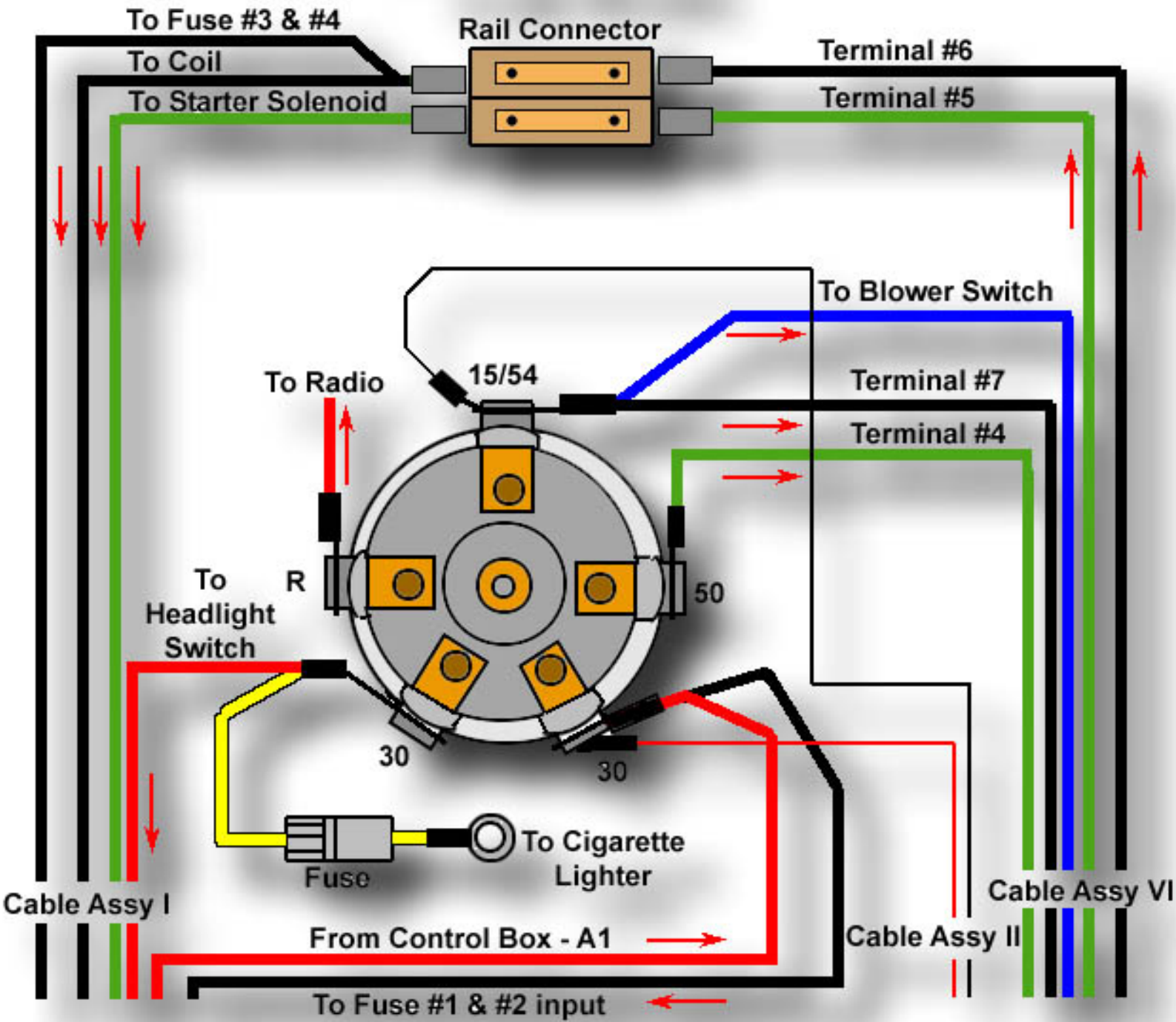

Horn Button
#30

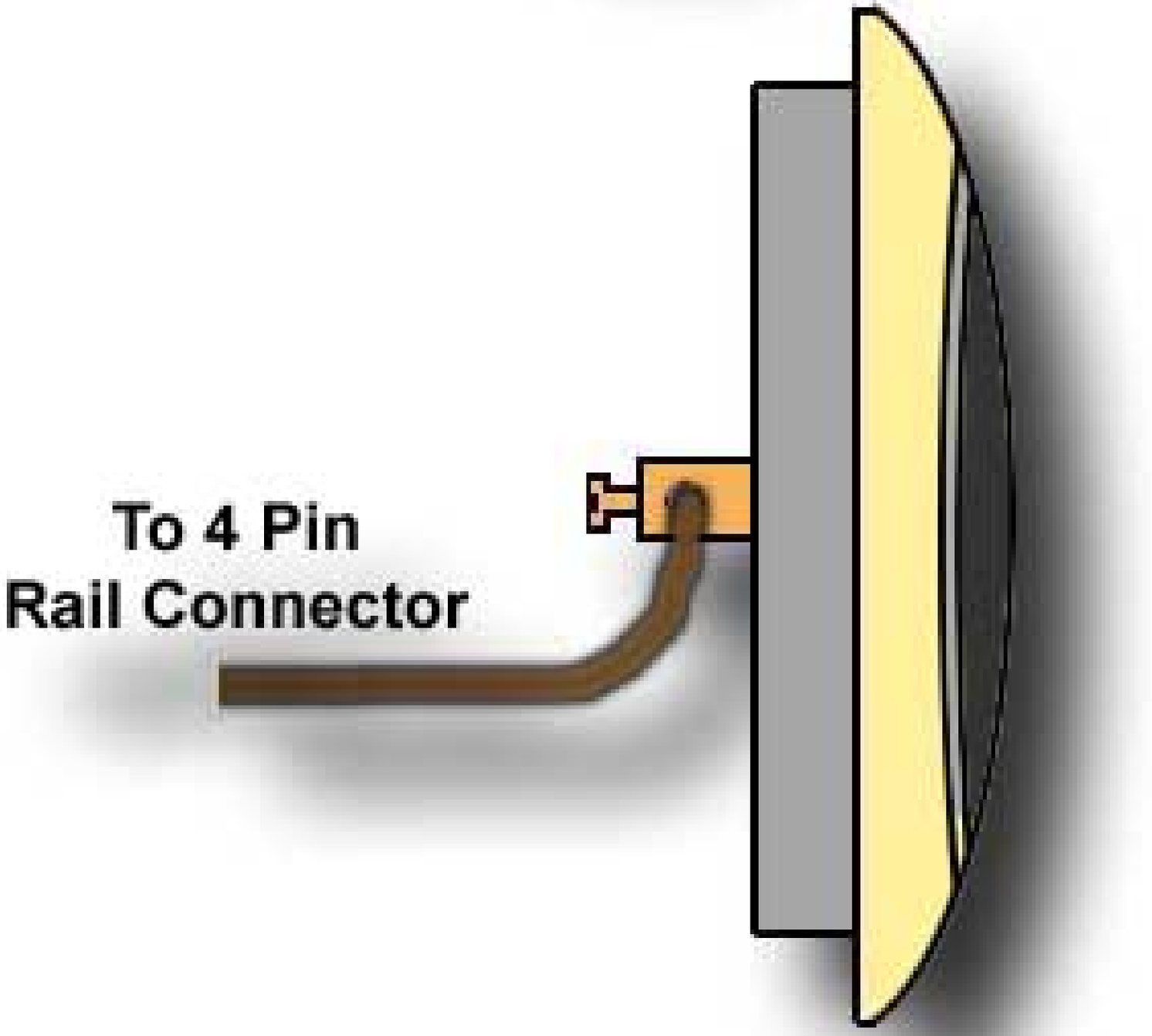

Horn #13

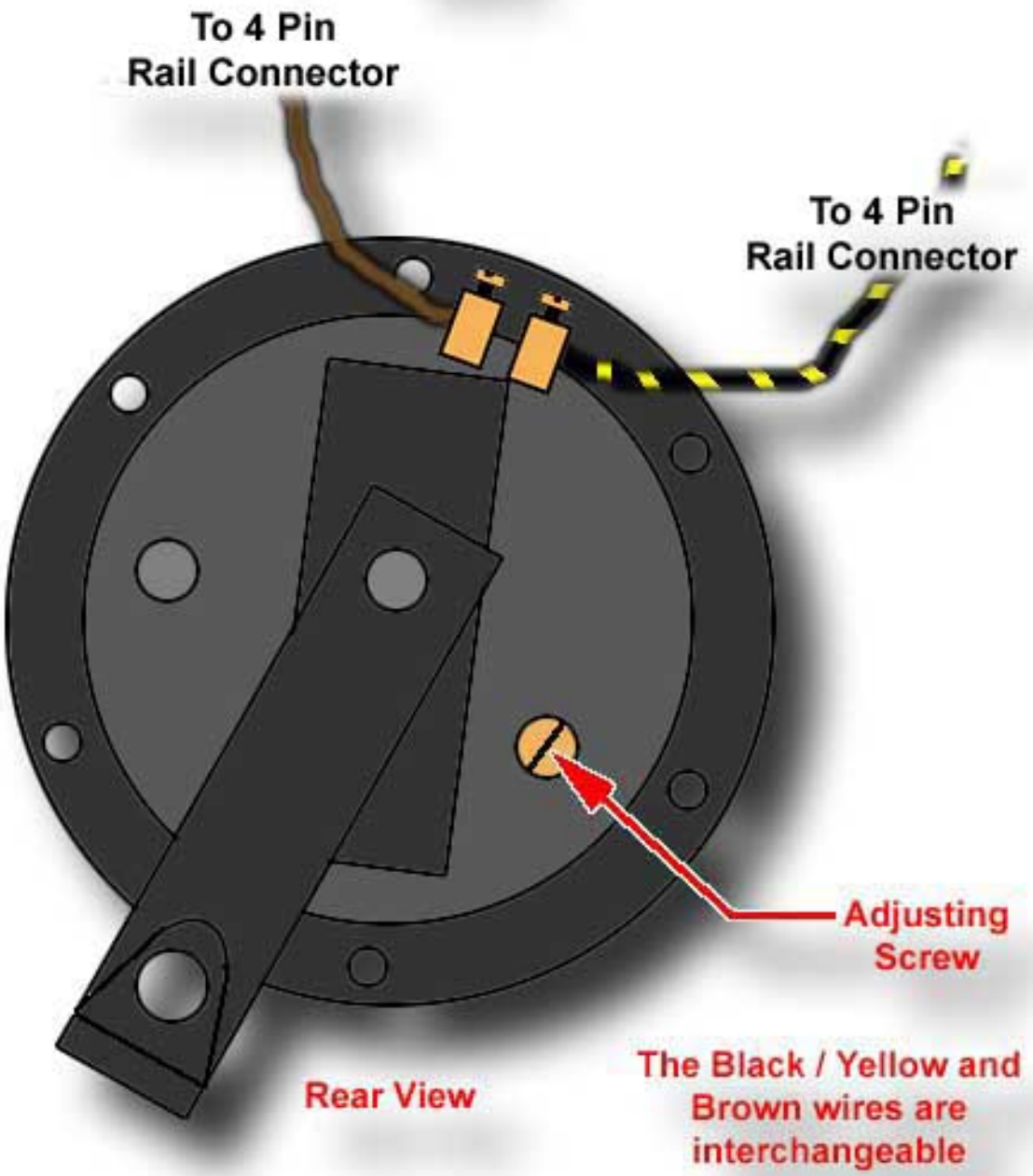
To 4 Pin
Rail Connector
To 4 Pin
Rail Connector
Adjusting
Screw
Rear View
The Black / Yellow and
Brown wires are
interchangeable

Heater Switch
#15

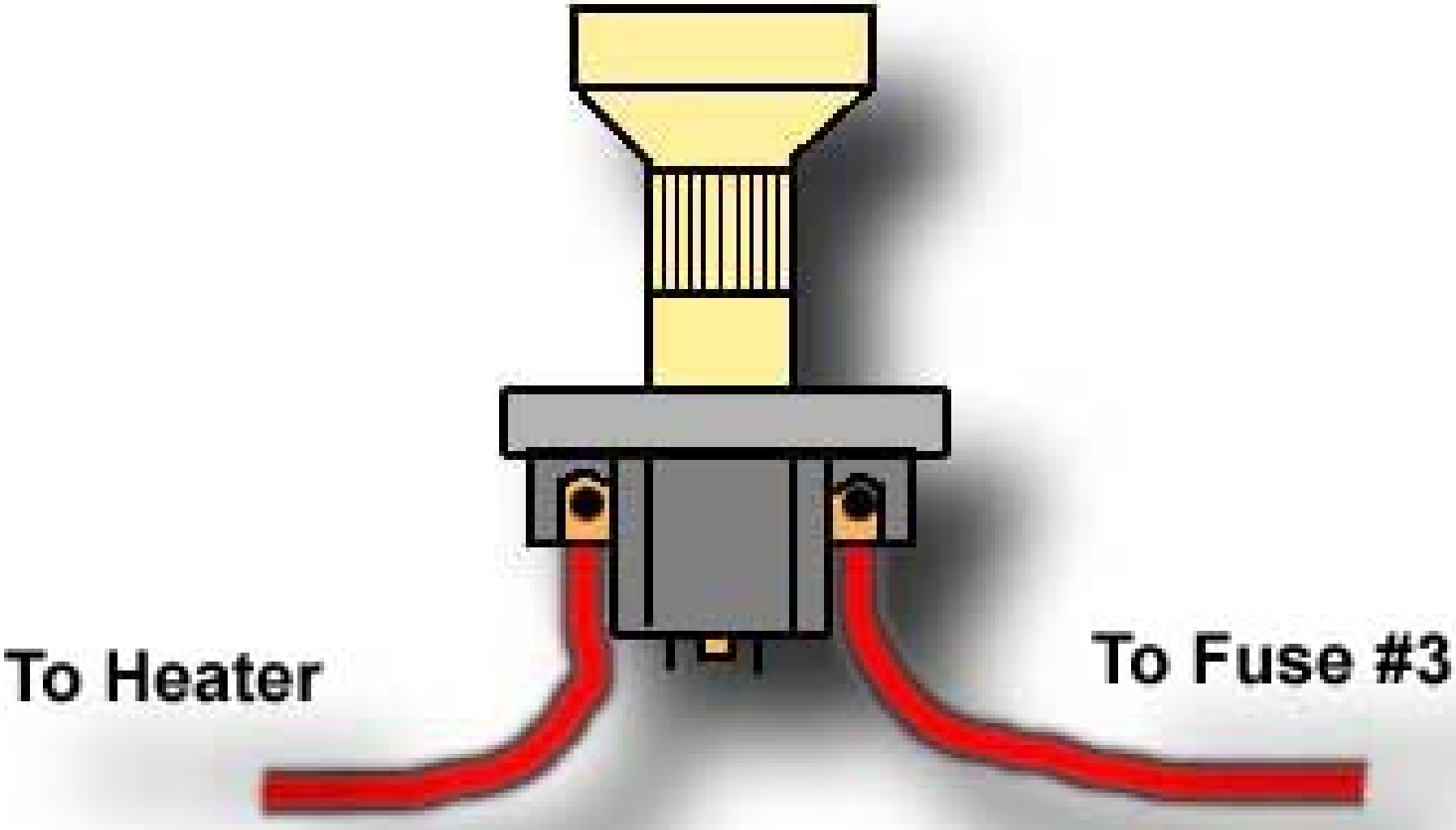

Headlight Switch
#28

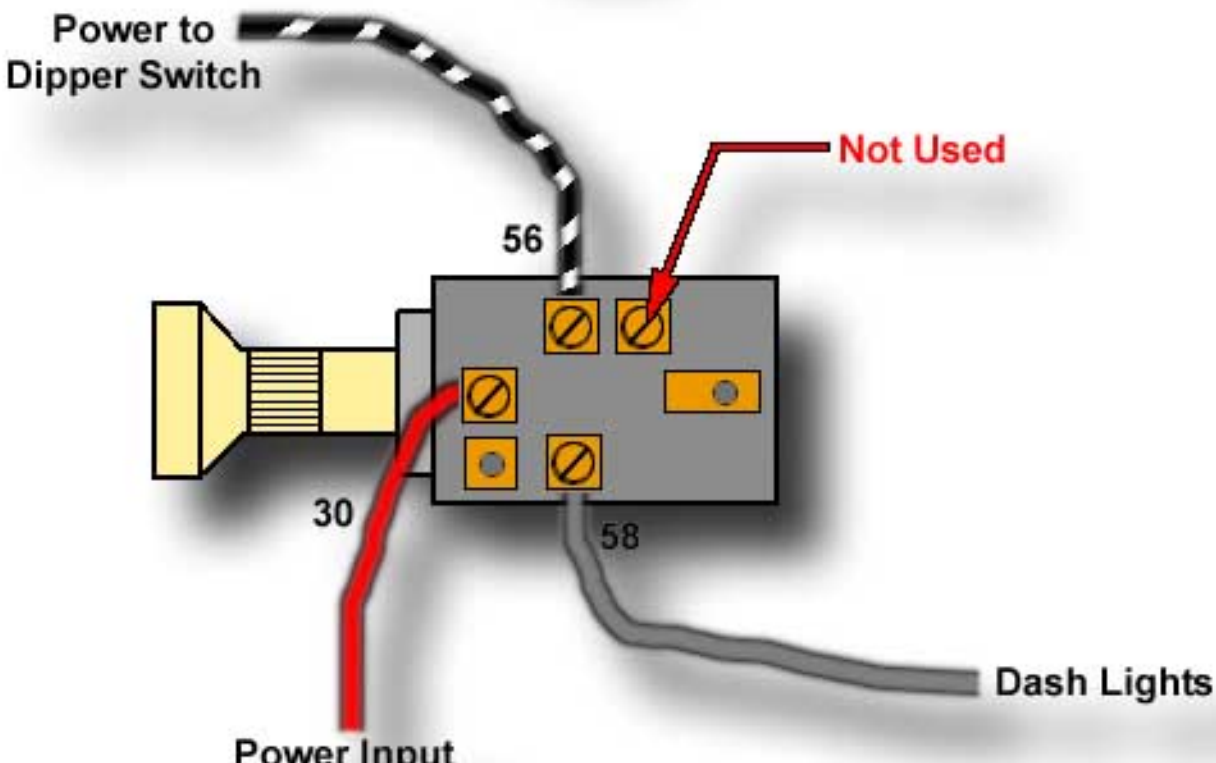

Headlight Socket #1 & #2 (Old Style)

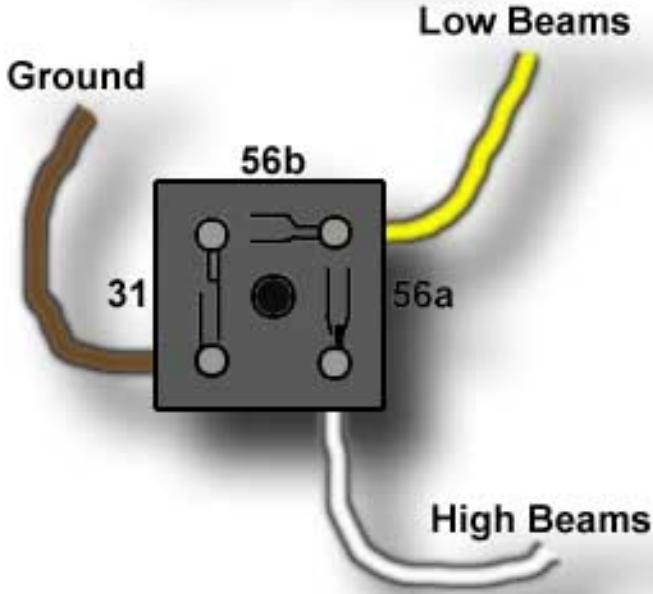

Back View

Headlight Socket #1 & #2 (New Style)

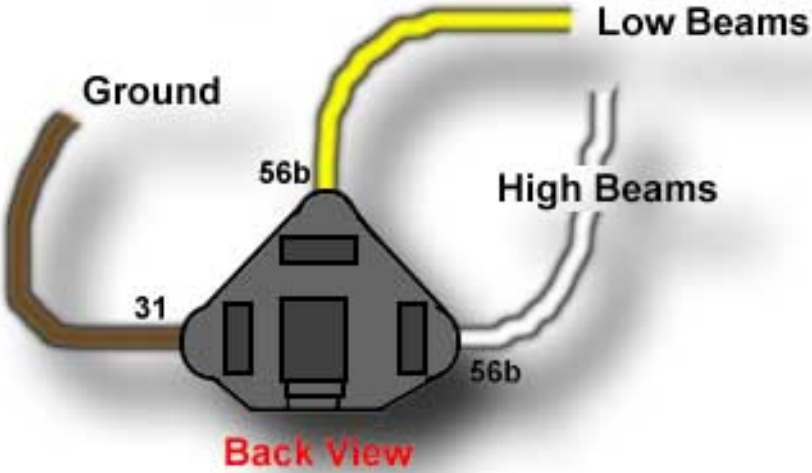

Instument Cluster

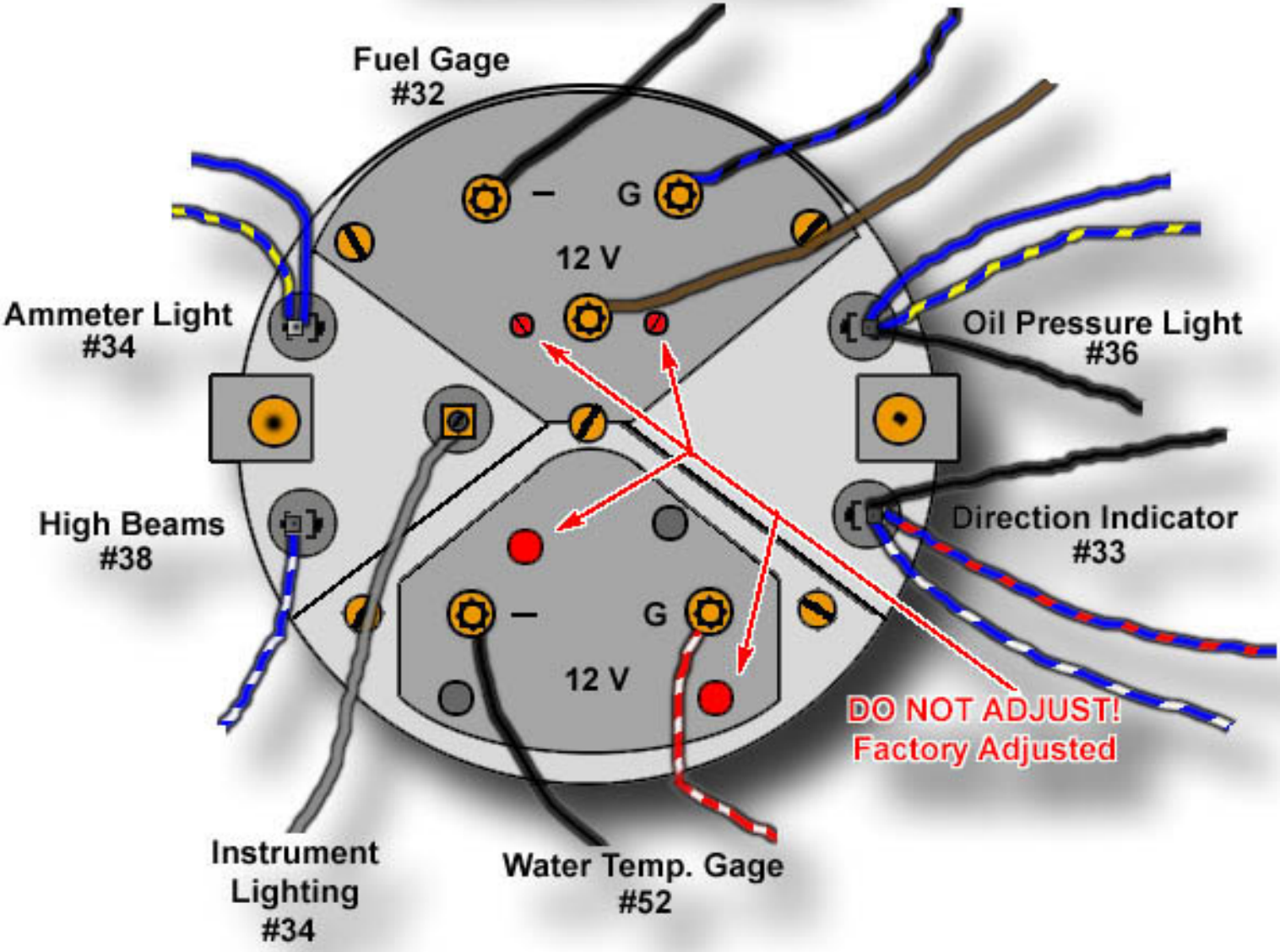

Fuse Block

1965 - 1967 W/Fuses Under Dash

Late Years

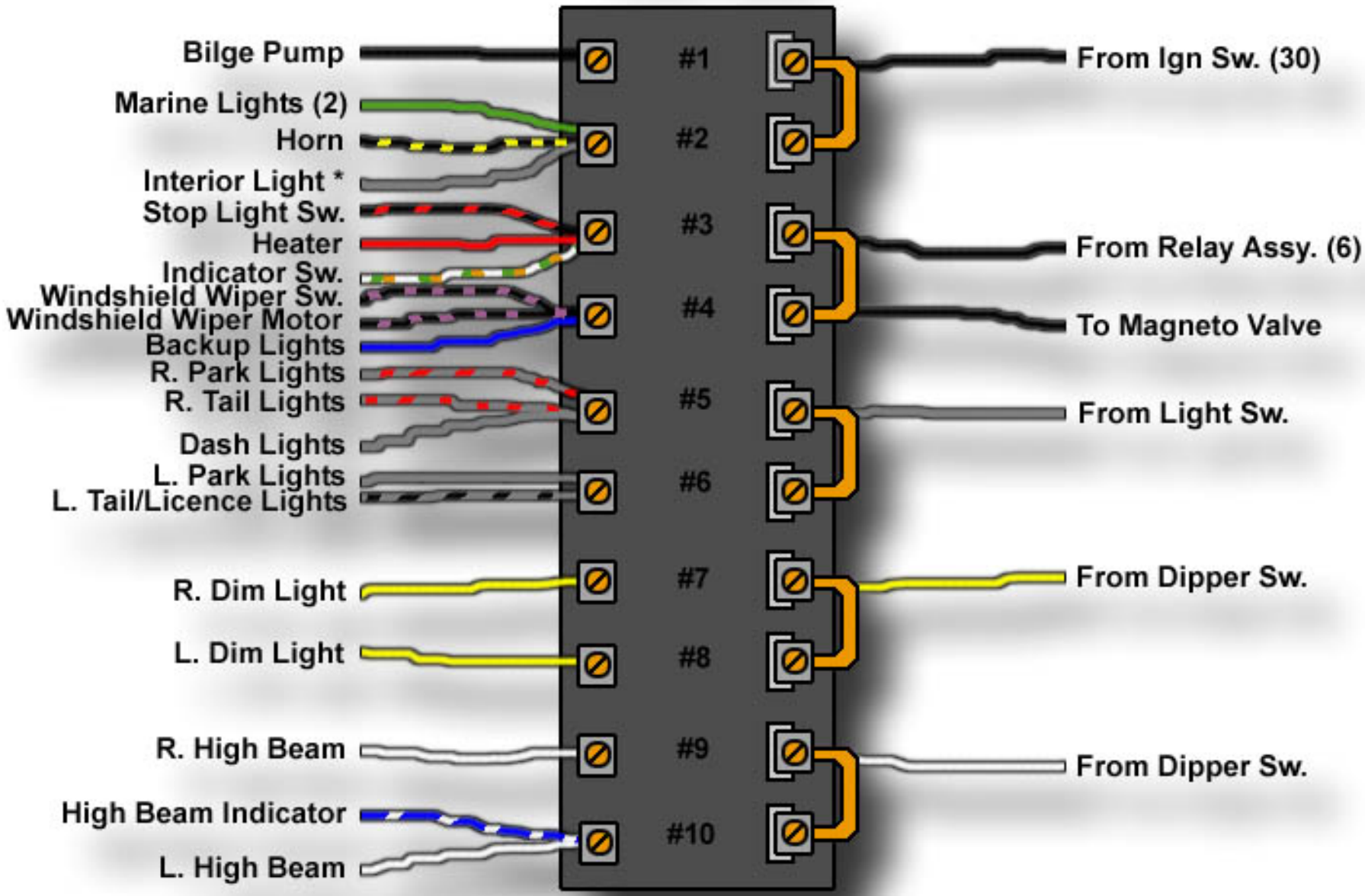

* White on some cars

Dipper (Dimmer) Switch

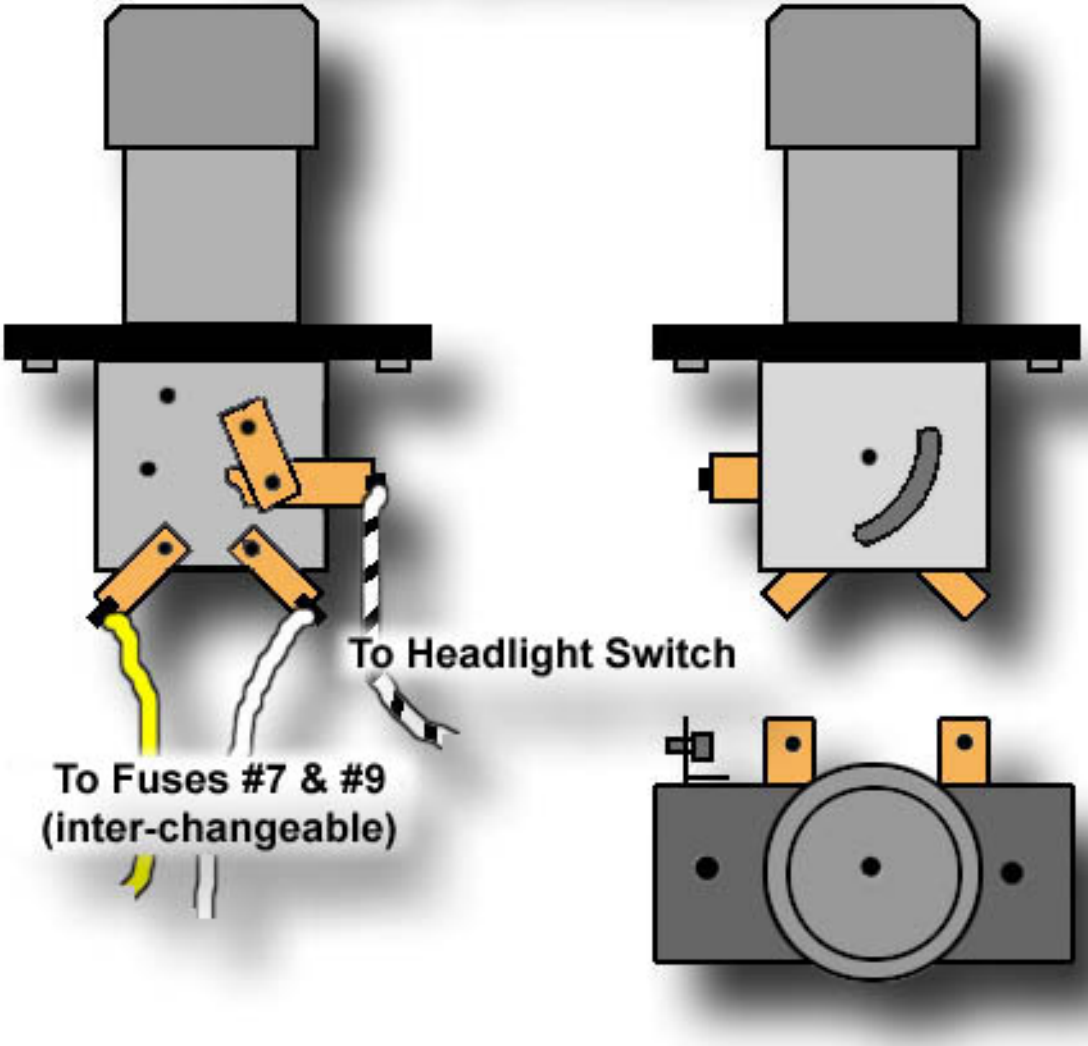

Clock

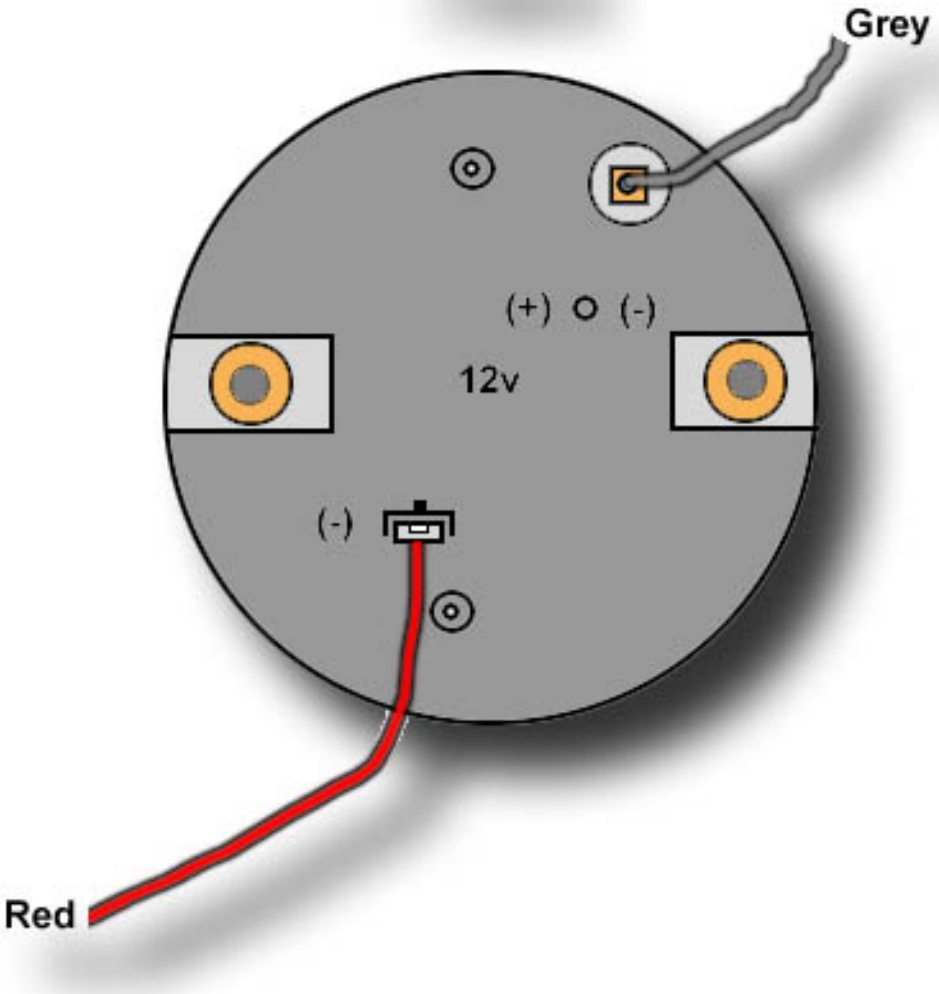

Cigarette Lighter

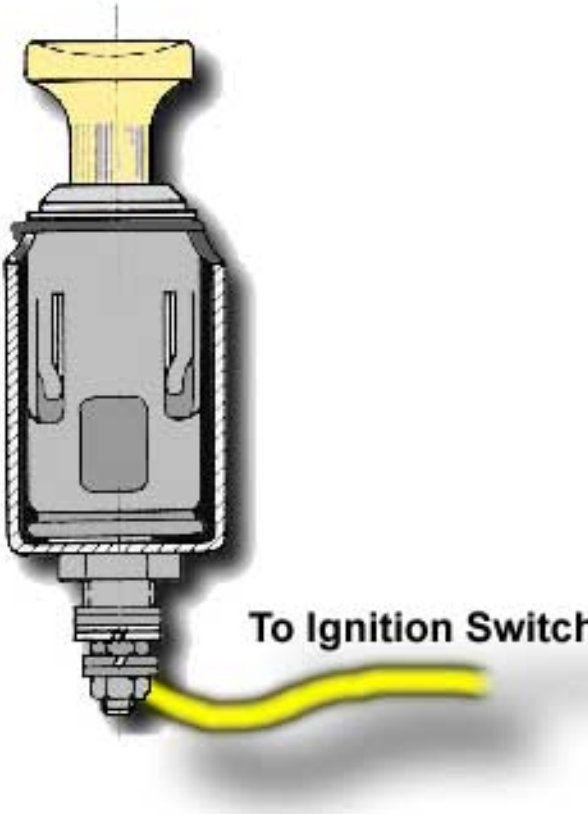

Bilge Pump Switch

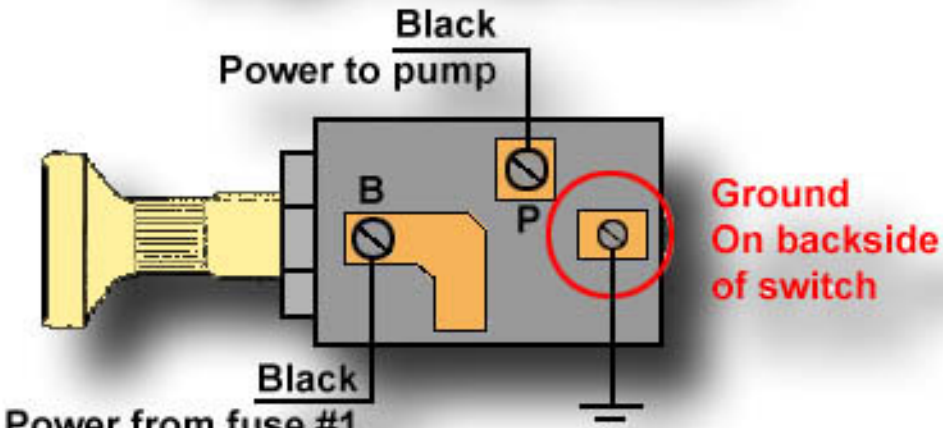

Bilge Pump

On older style pumps motors
the wire closest to the mounting
bracket is the positive (ground) wire.

To check polarity;
Remove the rubber pump drive.
Power on the pump
Ensure the motor turn clockwise

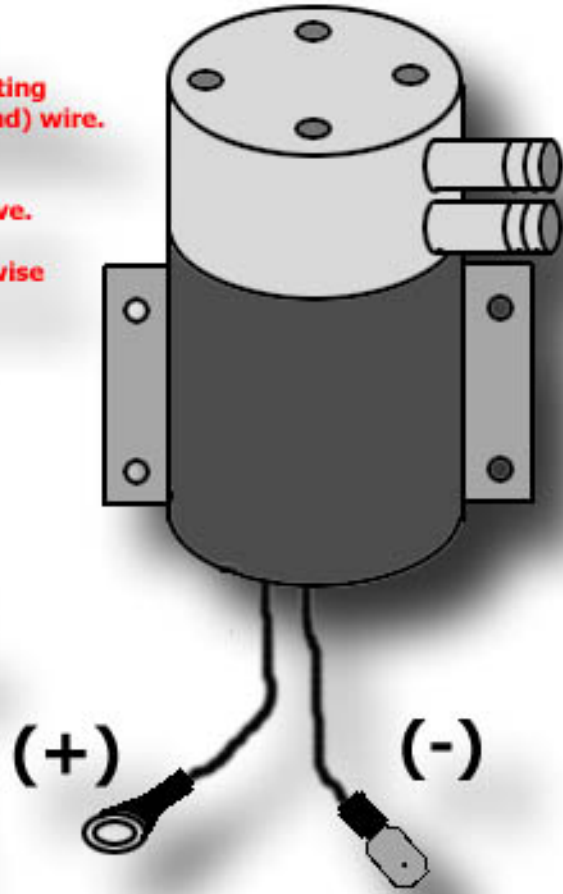

New Style
(-) = Black
(+) = Orange

Old Style
(-) = Black
(+) = Black